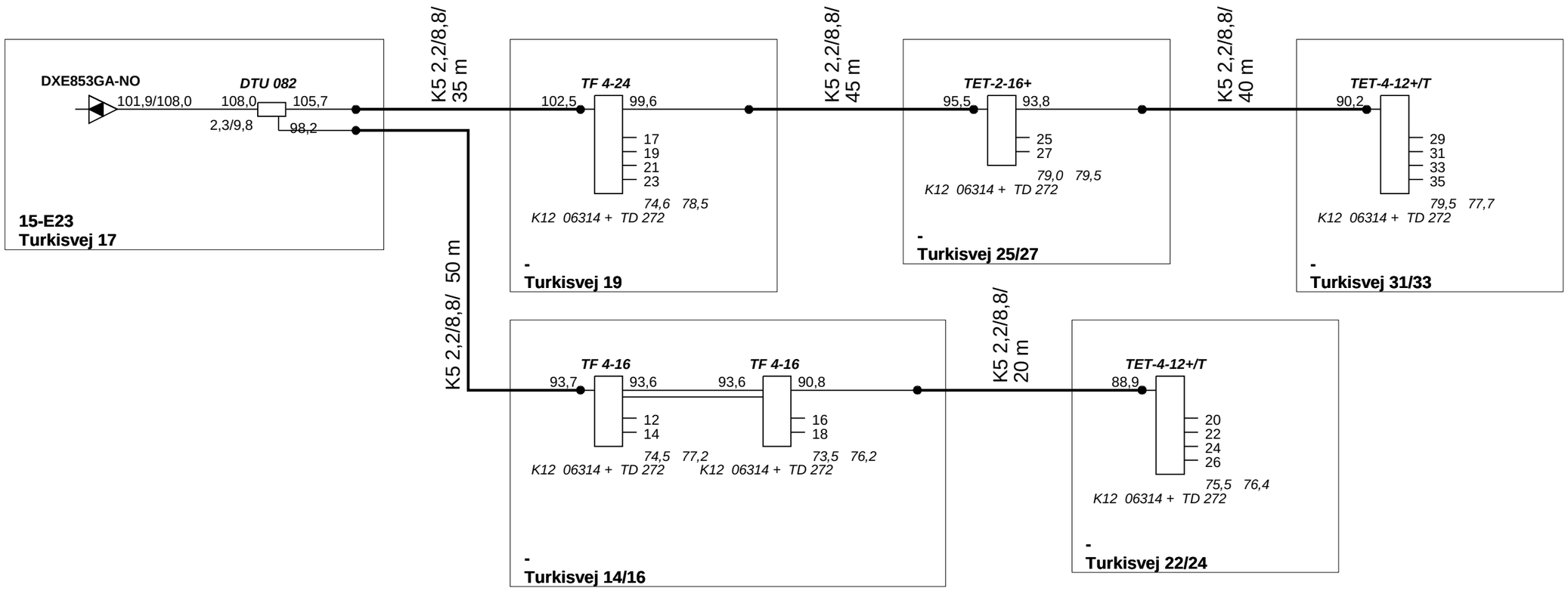

Reference : A :8031 Tarup, Node T3	**Stofa:** Uraniavej 6 8700 Horsens	Frequency : 175 - 860Mhz 65
Info : 15-E23: Turkisvej 17		Initials-Date : bfc - 14-May-2008
		Subscriber US : abn 18 us 22-34 dB