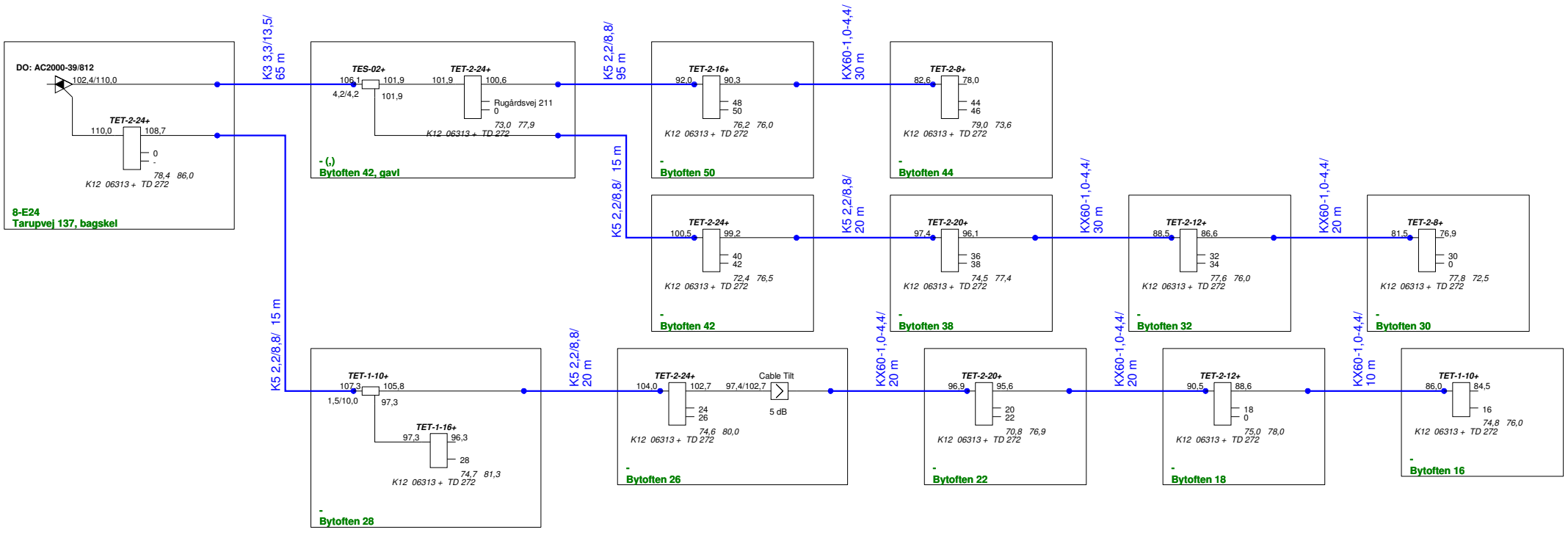

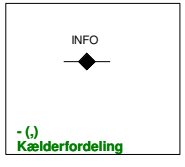

Reference :	**Stofa:**	Frequency :
A :8031 Tarup, Node T3	Uraniavej 6	175 - 860Mhz 65
		Initials-Date : OMJ - 07-Jan-2009
Info : 8-E24: Tarupvej 137, bagskel	8700 Horsens	Subscriber US : abn 21 us 24-43 dB