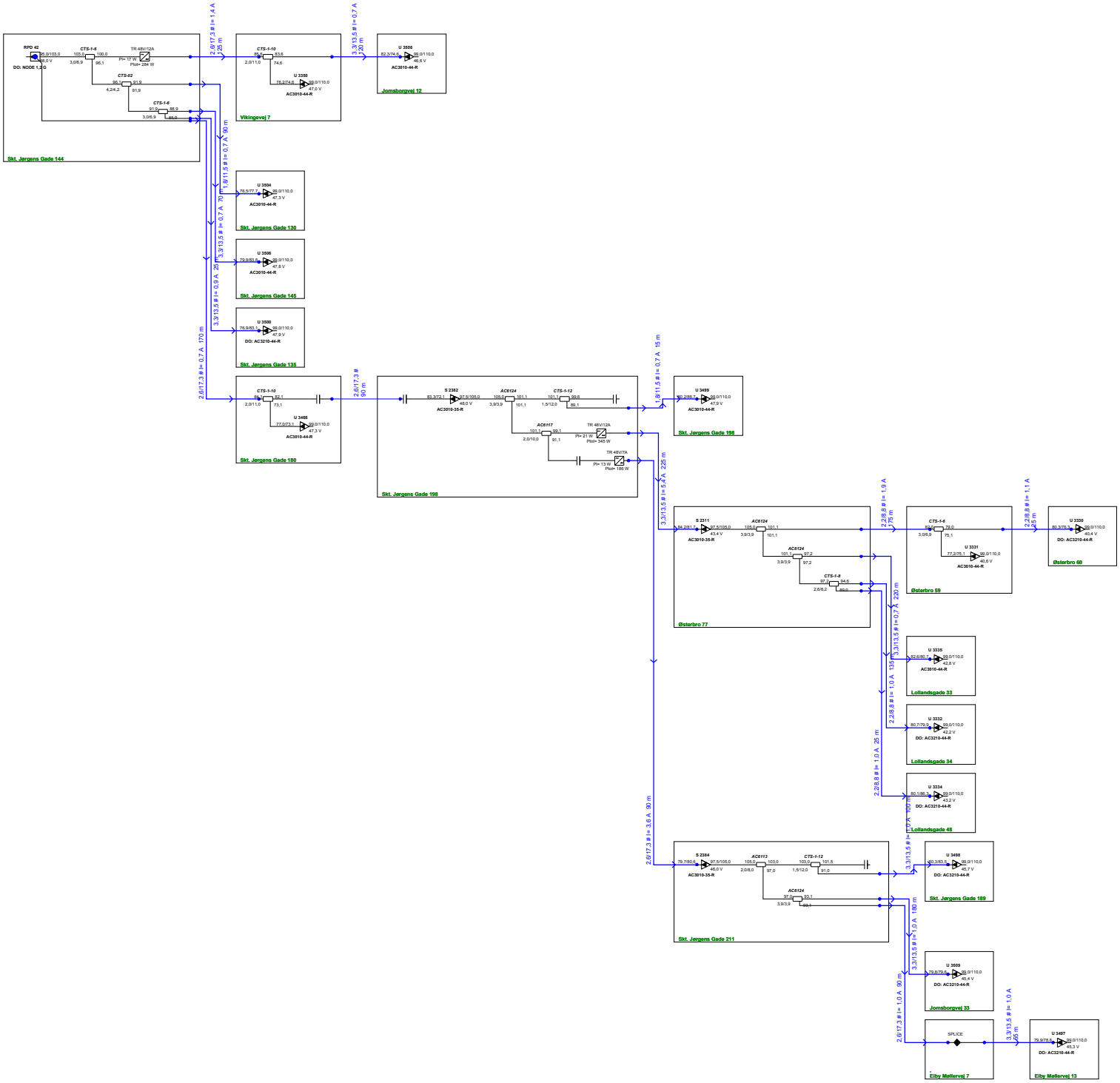

Project/Name: **Glenten 1218**	Glentevejs Antennelaug	Frequency: 252 - 1218Mhz
Reference: RPD 42	Vagtelvej 1-3	Initials: jph
		Date: 23-04-2024