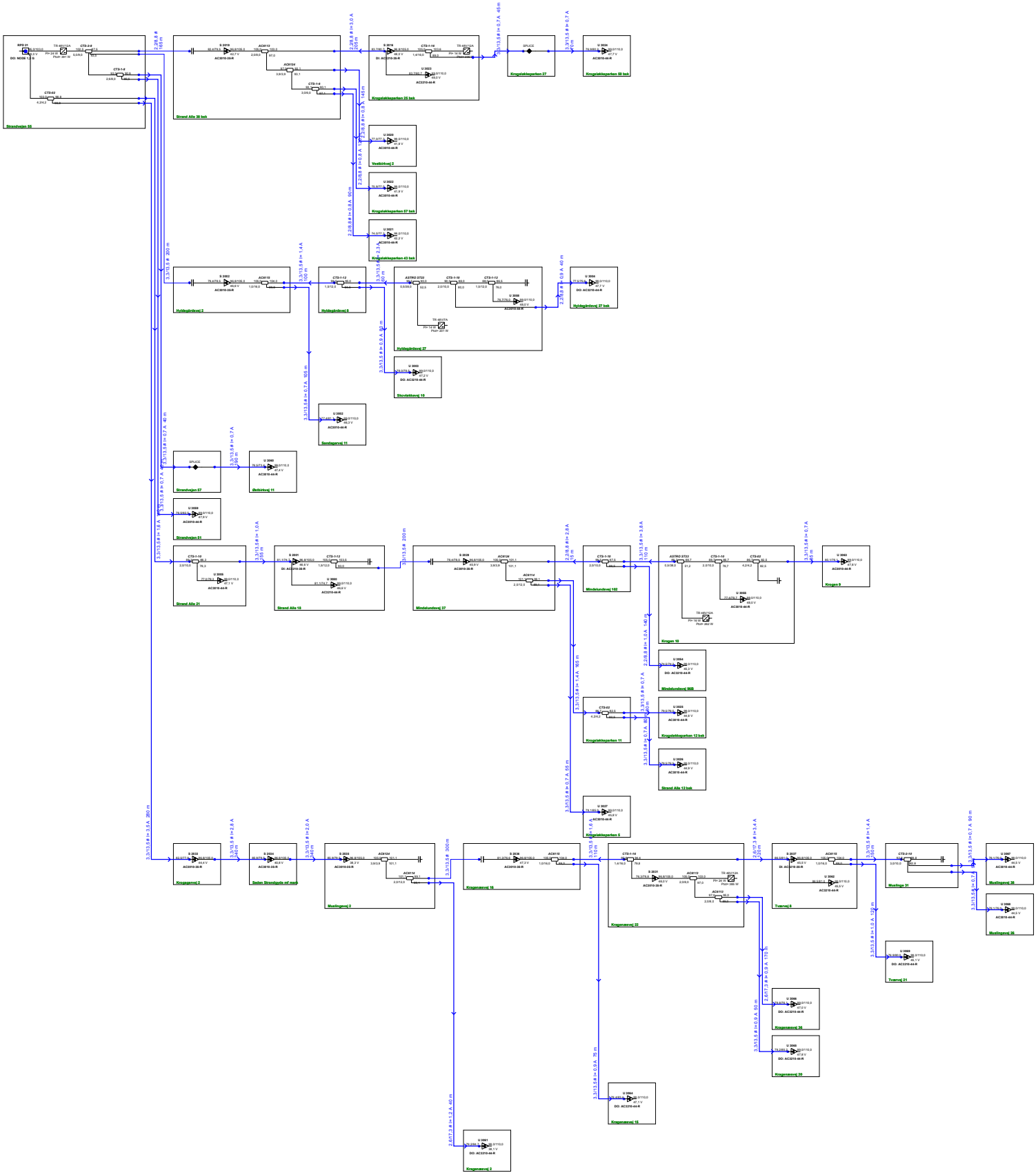

Project Name: Glenten 1218	Glentevejs Antennelaug Vagtelvej 1-3	Frequency: 290 - 323MHz
Drawing no: RPD 21		Indoor: yes
		Date: 10-12-2024