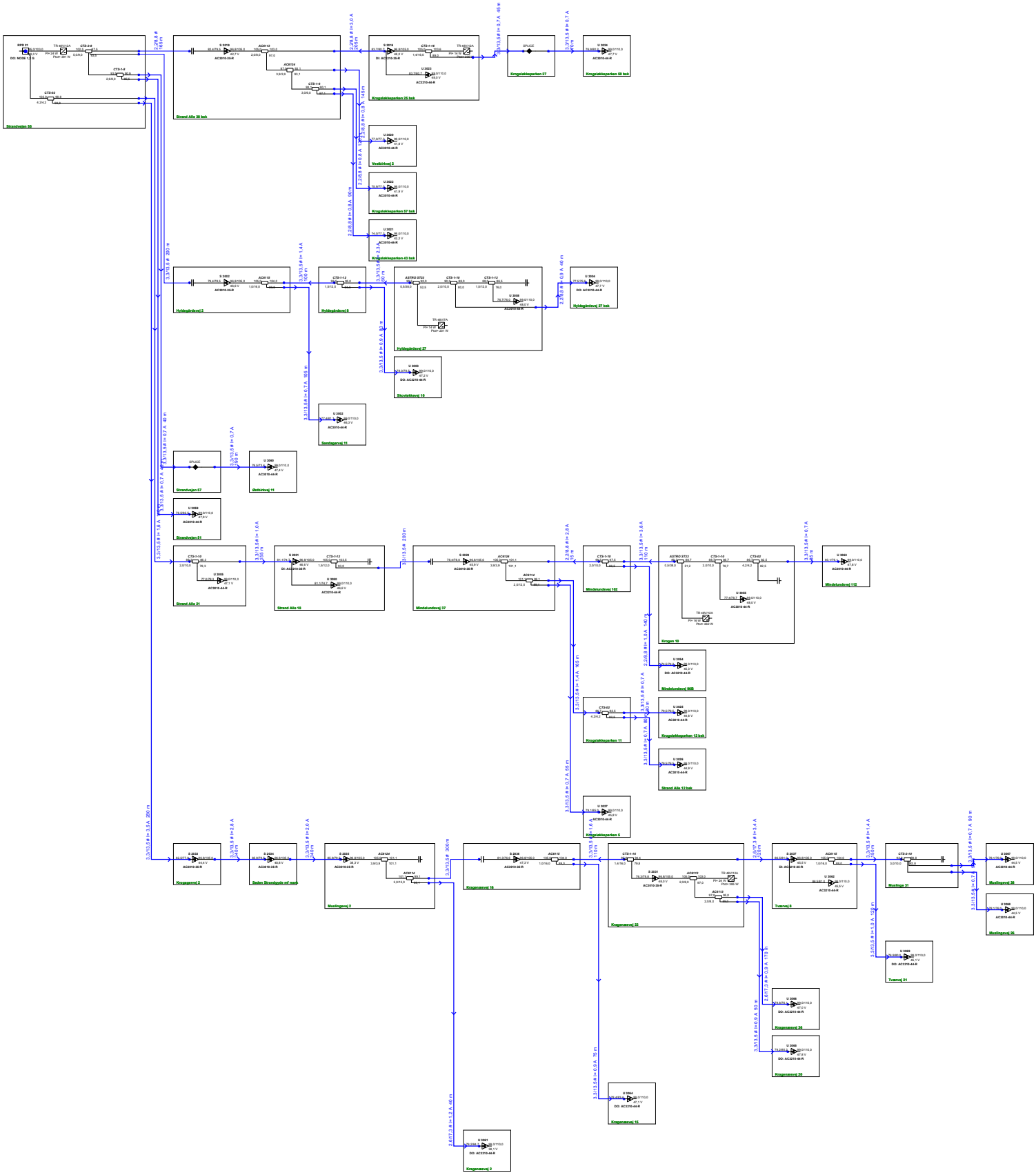

Project Name: **Glenten 1218**	Glentevejs Antennelaug	Frequency: 200 - 12 MHz
Drawn by: RPD 21	Vagtelvej 1-3	Scale: 1:1
		Date: 05.09.2024